REVISION					
ZONE	LTR	DESCRIPTION	DATE	BY	APVD
–	–	–	–	–	–

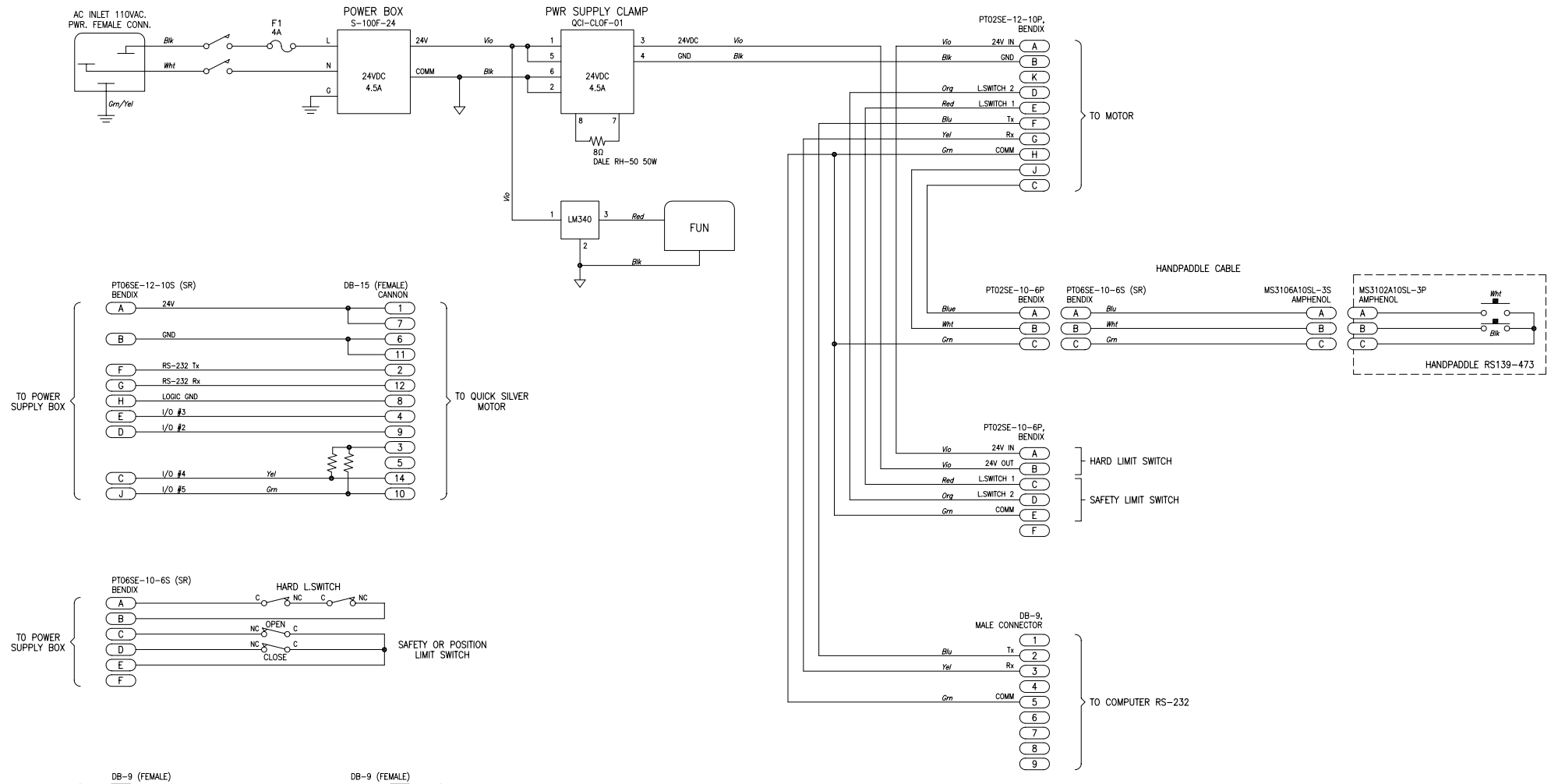

TOLERANCES UNLESS OTHERWISE NOTED			NATIONAL OPTICAL ASTRONOMY OBSERVATORIES
DECIMALS	FRACTIONS	ANGULAR	CERRO TOLOLO INTER-AMERICAN OBSERVATORY
.XX ± .01	– ±	± 0°30'	OPERATED BY THE ASSOCIATION OF UNIVERSITIES FOR RESEARCH IN ASTRONOMY UNDER COOPERATIVE AGREEMENT WITH
.XXX ± .003			NATIONAL SCIENCE FOUNDATION

NEXT ASSEMBLY	NAME	REF FILE
–	ROBO DIMM POWER SUPPLY BOX CABLES & LIMIT SWITCH	C1.DWG
		USED ON –

SCALE	DESIGNED BY / DATE	APPROVED BY / DATE	DWG N°	REV
	M. MARTINEZ S. MAY2001		CH8916.910-C1	–
PRINT ISSUED	DRAWN BY / DATE: R. LEIVA V. MAY2001	APPROVED BY / DATE		
	CHECKED BY / DATE: M. MARTINEZ S. MAY2002	APPROVED BY / DATE	RELEASED: MAY 13. 2002	SHEET 1 OF 1